Your Only Source for Customer Focused Shock & Vibration Test Solutions

AUTOSHOCK-II™

TECHLAB SYSTEMS

AUTOMATED SHOCK

AutoShock-II™ is a fully automated shock test system used to measure and identify product fragility levels and evaluate protective packaging. These systems perform a wide variety of half sine, square or saw-tooth waveform impacts. With the simulation of real world shock pulses and impact energy levels, manufacturers can systematically test and optimize product design and packaging.

AutoShock-II™ is a Windows 10 based system. User-friendly controls are designed to interface to a variety of data acquisition and analysis software systems. This unique feature of the **AutoShock-II™**, allows access to best-in-class data acquisition and analysis software.

AutoShock-II™ employs state-of-the-art braking and balanced lift mechanisms allowing for a low friction, repeatable, and rebound free impact. The nitrogen charged braking system is a safe, reliable and a cost-effective way to arrest a wide variety of payloads. The balanced hydraulic lift system is unique to the industry offering minimal column and bearing wear, while effortlessly providing an effective method to accurately position a wide array of payloads.

AutoShock-II™ utilizes a low profile impact absorbing base allowing for a lower overall system height, more accessible loading, and better test configuration. The square wave cylinders are recessed into the base for improved performance, optimal ergonomic operation and effortless system accessibility.

AutoShock-II™ meets or exceeds OEM, ASTM, MIL-STD, IEC, and ISO required test standards.

Standard Features:

- **Windows 10 based PC control system with intuitive remote control interface** automates procedures and reduces test times. The operator simply enters conditions and **AutoShock-II™** converts them into specific machines instructions and performs the test.
- **A multiple post guidance system** with balanced hydraulic lift cylinders provides automatic, chatter free positioning and alignment of the shock table.
- **An automated shock drop calculator** simplifies the determination of drop heights and pressures to quickly achieve the operator's requested shock pulses. Drop heights and pressures can be stored and easily retrieved.
- **High performance cast or welded aluminum tables** produce optimum table strength and stiffness with minimal table noise and eliminating the need for over filtering of shock test data.
- **A state-of-the-art braking system** eliminates secondary impact rebounds and provides a secure and reliable method of holding table position prior to the drop.



AUTOMATED SHOCK TESTING

AS-II

- **Dual waveform shock pulse programmers** provide automated waveform switching between short duration half sine and square wave shock pulses, with consistent repeatability to streamline damage boundary testing.
- **L.A.B' s unique balanced square wave programmer system** provides balanced impact across the product and table. Uniform placement of impact cylinders on the low-profile high strength base, provides the greatest possible impact uniformity.
- **A full range of safety features** including brakes that engage if power is lost or communications with the remote control are interrupted; a safety horn that sounds before equipment movement; a 24 volt output for an additional safety device such as a warning light; dual emergency stop buttons for mounting on or near the machine and at the operator's station; an additional emergency stop input such as options below, or an additional stop button
- **Universal integration** with a wide array of data acquisition systems allows the user to select a preferred system or use L.A.B's.

Optional Features:

- **Automated, high speed data acquisition and analysis system**
  To meet your precise requirements, to capture all necessary shock test data; and to produce damage boundary curves (DBC), shock response spectrums (SRS), FFT, and many other types of data analysis.



- **High performance magnesium table**
  For low noise and highest possible resolution.
- **Safety interlock system**
  Pressure sensitive emergency stop mat to prevent table drops if the perimeter is intruded upon; 24 volt warning lights.
- **Acceleration kit**
  For performing shock pulses requiring velocities greater than achievable with a free fall test. (see chart on next page)
- **Elastomer half sine kit**
  Performs a wide range of long duration half sine pulses of up to 30 ms with acceleration up to 300 g's; one kit is required for each dual waveform programmer.

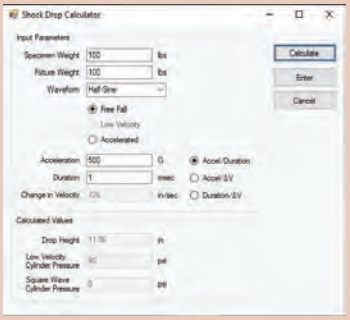

- **Low impulse kit,**
  Requirement for performing shock tests with a velocity change less than 1.5 m/s. (5 feet/sec.)
- **Dual mass shock amplifiers**
  Testing relatively small specimens at short duration and high acceleration; the amplifier is a precision auxiliary shock table that is bolted to the top of the primary shock table. Several models are available based upon the size of the **AutoShock-II™ as well as your test requirements.**The Shock Amplifier along with the specific elastomer half sine kit configured with the primary shock table, will give you a wide variety of high G and Low Duration half sine pulses.
- **Lead mold and Electric Furnace**
  Melting Lead and making pellets for saw-tooth pulses are also available.
- **Voltage adaptation to meet local requirements**

CE COMPLIANT

AUTOSHOCK-II

TECHLAB SYSTEMS

Sample Performance Curves

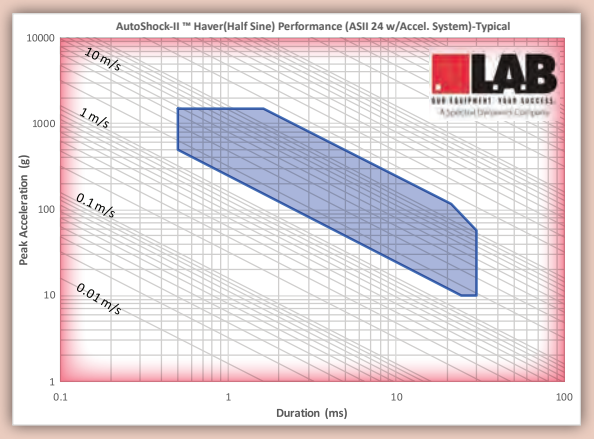

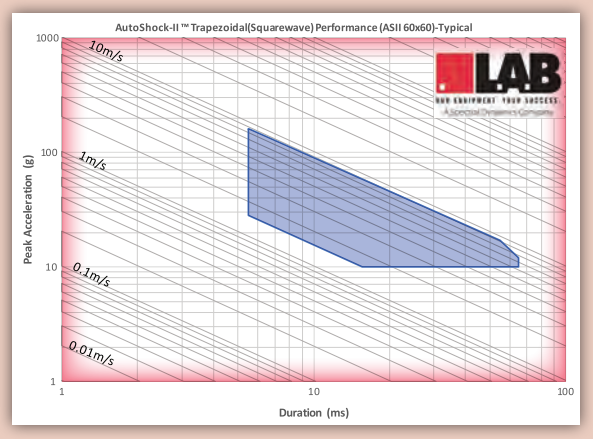

The above performance curves are representative of specific AutoShock-II™ system performance. The specific model, test payload, as well as the accessory configuration (if present) will impact the desired performance. Please consult your L.A.B sales specialist for more details regarding your intended application.



Autoshock-II™ System with Controller

AUTOSHOCK-II

TECHLAB SYSTEMS

Standard Autoshock-II™ Configurations

	AS-II 24x32	AS-II 36	AS-II 36x42	AS-II 48	AS-II 48x60	AS-II 60
Table Size	61 x 81 cm (24" x 32")	91 x 91 cm (36" x 36")	91 x 107 cm (36" x 42")	122 x 122 cm (48" x 48")	122 x 152 cm (48" x 60")	152 x 152 cm (60" x 60")
Seismic Base Weight	1,700 kg	2,300 kg	4,050 kg	5,800 kg	7,000 kg	8,200 kg
Nominal Specimen Weight	90 kg	140 kg	205 kg	270 kg	335 kg	400 kg
Maximum Specimen Weight	600 kg	600 kg	600 kg	900 kg	900 kg	900 kg
Machine Weight	2,300 kg	3,200 kg	4,500 kg	5,800 kg	7,100 kg	8,400 kg
Machine Dimensions (WxDxH)	1.22 x .86 x 2.75 m	1.63 x 1.07 x 2.75 m	1.63 x 1.22 x 2.75 m	1.93 x 1.63 x 2.80 m	1.93 x 1.63 x 2.85 m	2.30 x 1.63 x 2.85 m

	AS-II 24x32	AS-II 36	AS-II 36x42	AS-II 48	AS-II 48x60	AS-II 60
Pulse Duration*	1.5 – 65 ms	2.0 – 65 ms	2.0 – 60 ms	3.0 – 60 ms	3.0 – 60 ms	3.0 – 60 ms
Max. Free Fall Velocity Change: Half-sine, Trapezoidal, Squarewave	7.3 m/s	7.0 m/s	7.0 m/s	7.0 m/s	7.0 m/s	7.0 m/s
Max. Accelerated Fall Velocity Change: Half-sine, Trapezoidal, Squarewave	12.2 m/s	11.6 m/s	11.6 m/s	11.6 m/s	11.6 m/s	11.3 m/s
Maximum Acceleration*	600g	600g	600g	600g	600g	500g
Utility Requirements	3-phase electric power, 90 psi (620kPa) air utility, and a 2200 psi (15MPa) nitrogen supply					

*Pulse Duration and Maximum Acceleration are based upon the physical constraints of the system, pulse shape as well as the data acquisition systems and techniques used to acquire the shock pulse. Please consult your L.A.B sales specialist for more detail.

TECHLABSYSTEMS

Due to our continuous commitment to product development, the above specifications and features may be modified without notice.

LAB
Your Only Source for Customer Focused Shock & Vibration Test Solutions

L.A.B Equipment LLC, 1549 Ardmore Avenue, Itasca, IL 60143, USA
Phone: 630-595-4288 Fax: 630-595-5196 www.labequipment.com

Your Only Source for Customer Focused Shock & Vibration Test Solutions

MSA TECHLABSYSTEMS

For High Intensity Shock Testing

MASS SHOCK AMPLIFIERS

MASS SHOCK AMPLIFIERS

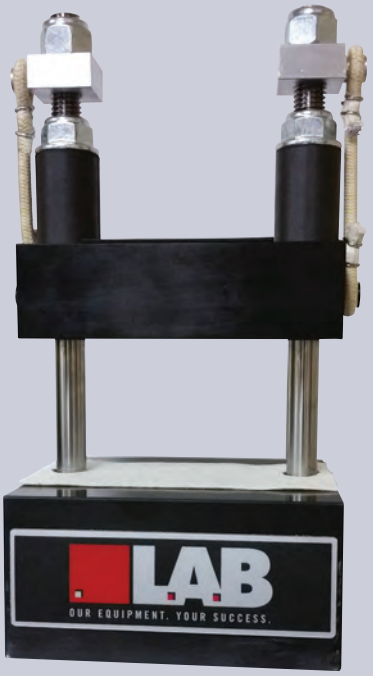

Mass Shock Amplifiers (MSA) are use for testing relatively small specimens with very short duration, high acceleration pulses on shock machines which would not be capable of generating these pulses. There are two models: MSA-89x89 and MSA-305x305.

Both models can be used for generating the most test conditions specified in MIL-STD, ISTA, ASTM, ISO and other internationally and industry recognized standards. Depends on shock systems, the MSA-89x89 can generate accelerations as high as 100,000 g; and the MSA-305x305 can generate accelerations up to 10,000 g at pulse duration as short as 0.2 ms.

SYSTEM OPERATION

The amplifiers consist of precisely guided secondary shock table and a massive base which is bolted to the top of the table of the primary shock machine. The specimen is mounted on top of the secondary shock table.

The secondary table is held up against high damping elastomer bumpers by elastic shock cords. A high density felt programmer is placed between the secondary table and its base. The thickness of the felt controls the duration of the pulse experienced by the secondary table and the specimen.

Any type of resilient programmer which will produce a pulse duration of about 6 ms or less is used between the primary table of the machine and its base.

While the primary shock table is falling, the secondary table is held approximately 64 mm above its base by the elastic shock cords. When the primary shock table impacts and rebounds from the programmer on the base of the machine, the secondary table continues downward stretching the shock cords. While the primary shock table is moving upward after rebound, the secondary table impacts on the felt programmer and then rebounds against the soft elastomer bumpers and is held against the bumpers by the shock cords. When used on a shock machine with rebound brakes, no secondary impact on the felt programmers occurs because of the high damping properties of the bumpers and the upward pull of the shock cords.

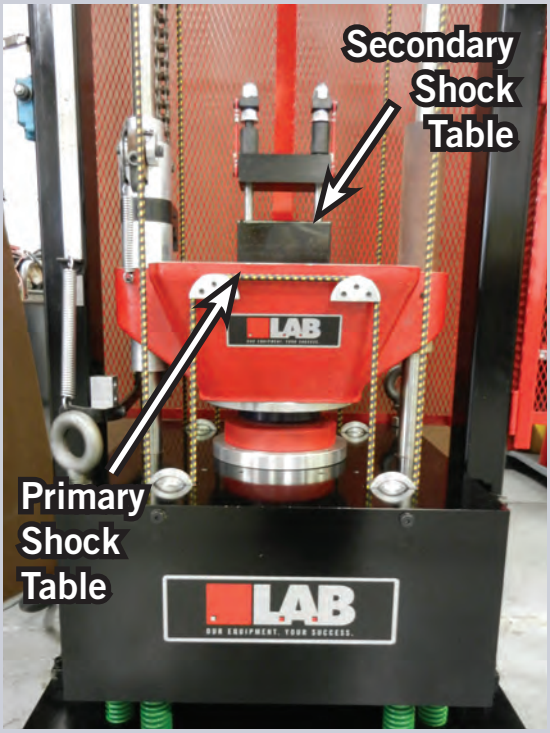

MASS RATIO AND VELOCITY AMPLIFICATION

Because the weight of the secondary table and specimen is much less than the combined weight of the primary shock table and amplifier base which it is impacting against, the secondary table experiences a velocity change which is greater than that experienced by the primary shock table. This velocity amplification ranges from a minimum about 10% for machines with light shock tables to a maximum about 30% for machines with heavy shock tables. A "light" shock table is anything between 9 kg to 45 kg. A "heavy" shock table is anything between 45 kg to 227 kg.

To calculate the maximum performance of the shock amplifier on a particular shock machine, it is necessary to know the machine's maximum velocity change and the approximate weight of the primary shock table.

Secondary Table ΔV = Amplification x Machine Velocity Change

For example, the performance of both MSA-89x89 and MSA-305x305 would have the following performance on a shock machine capable of producing a velocity change of 9 m/sec and a shock table weighing 136 kg:

MSA-89x89 – the 136-kg table is in the "heavy" range, so the maximum amplification factor is used.

Secondary Table $\Delta V = 1.3 \times 9$ m/sec = 12 m/se

MSA-305x305 – the 136-kg table is between the "light" and "heavy" range, so an intermediate amplification factor is used.

Secondary Table $\Delta V = 1.2 \times 9$ m/sec = 11 m/sec

To determine what combination of peak accelerations and pulse durations can be generated on the shock amplifiers, the following formula can be used for half-sine pulses:

$$\Delta V = .02\ AT$$

Where

- ΔV = Velocity Change in ft/sec
- A = Peak Acceleration in g's
- T = Pulse Duration in millisecond

For example, the velocity change required to produce a 10,000 g / .2 ms pulse is

$\Delta V = (.02)\ (10{,}000)\ (.2) = 40$ ft/sec (12 m/sec)

SPECIFICATIONS

	MSA-89x89	MSA-305x305
Specimen mounting surface	3.5" x 3.5" (89 x 89 mm)	12" x 12" (305 x 305 mm)
Maximum specimen weight	5 lbs (2 kg)	25 lbs (11 kg)
Maximum acceleration	100,000 g	10,000 g
Maximum pulse duration	1.0 ms	1.0 ms
Minimum pulse duration	0.05 ms	0.2 ms
Velocity amplification	10% minimum 30% maximum	10% minimum 30% maximum
Total mass of MSA	35 lbs. (16 kg)	326 lbs. (148 kg)
Base dimensions	6" x 6" (152 mm x 152 mm)	12" x 18" (305 mm x 457 mm)

LAB
Your Only Source for Customer Focused Shock & Vibration Test Solutions

L.A.B Equipment LLC, 1549 Ardmore Avenue, Itasca, IL 60143, USA
Phone: 630-595-4288 www.labequipment.com

EASY-TO-USE SYSTEM

The Mass Shock Amplifiers are very simple to use. The pulse duration is adjusted by changing the thickness of the high density felt programmer. Peak acceleration is controlled by changing drop height or velocity change on the machine.

No adjustment of the elastic shock cords or of any bolt torques are required. When used on machines which product repeatable velocity changes, repeatability of the pulses produced by the shock amplifiers is excellent.

MOUNTING GUIDE

To install the MSA, it may be necessary to back off the adjusting nuts on either side of the adjuster block in order to permit insertion of an Allen wrench between the MSA table and base.

Proper preload can then be applied by positioning the adjusting nuts so that the distance between the bottom surface of the MSA table and the top of the MSA base in 2 – ½ (635 mm).

Center the MSA base on the shock machine table and align the mounting holes. Tighten the hold down bolts. If the mating surface appears to be uneven, apply a coat of grease at the interface and then tighten the hold down bolts. This will improve the mechanical coupling.

Model MSA-89x89

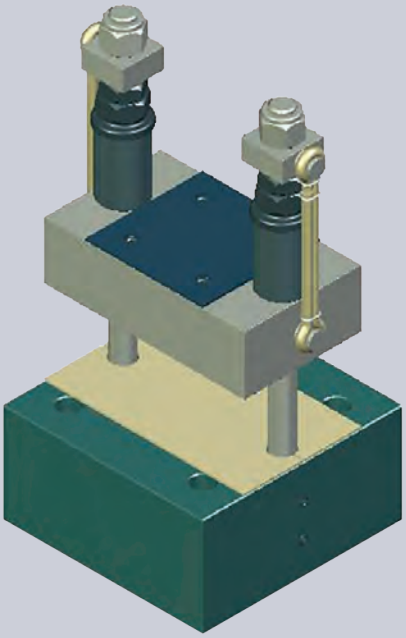

Model MSA-89x89

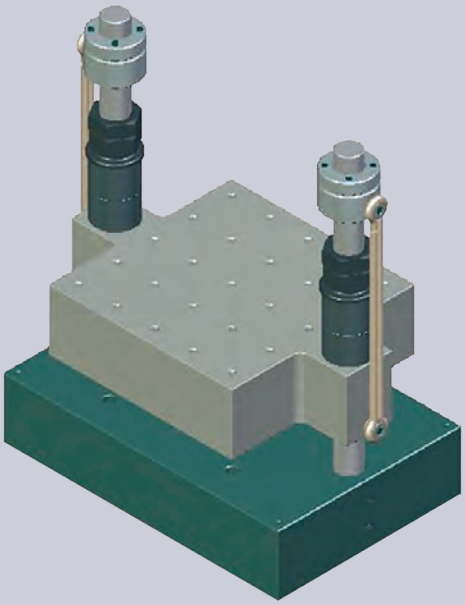

TECHLABSYSTEMS

LAB
Your Only Source for Customer Focused Shock & Vibration Test Solutions

L.A.B Equipment LLC, 1549 Ardmore Avenue, Itasca, IL 60143, USA
Phone: 630-595-4288 www.labequipment.com